WIND ROSE: Newport CMAN - Annual 2001-2008

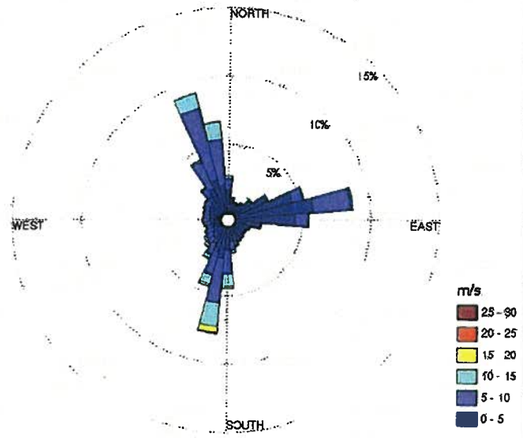

WIND ROSE: Newport CMAN - January 2001-2008

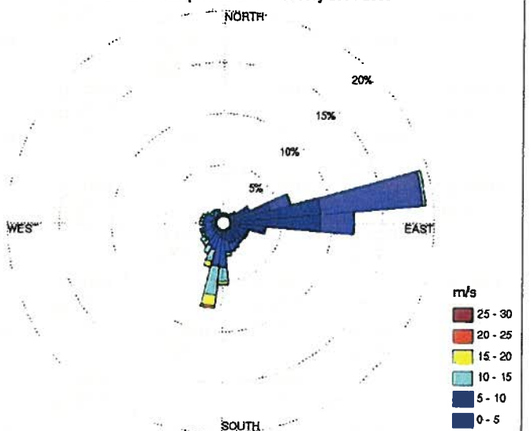

WIND ROSE: Newport CMAN - July 2001-2008

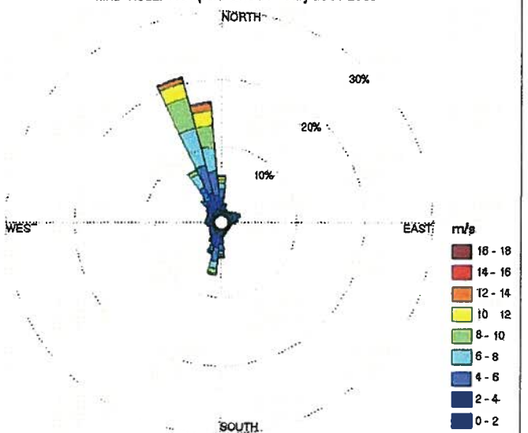

HYDRAULIC CHARACTERISTICS		
CHARACTERISTIC	VALUE	UNITS
DIURNAL TIDAL RANGE	8.34	FEET
AVERAGE WAVE HEIGHT	2 TO 3	FEET
MAXIMUM CURRENT SPEED (EBB & FLOW TIDES)	2 TO 3	FEET PER SECOND

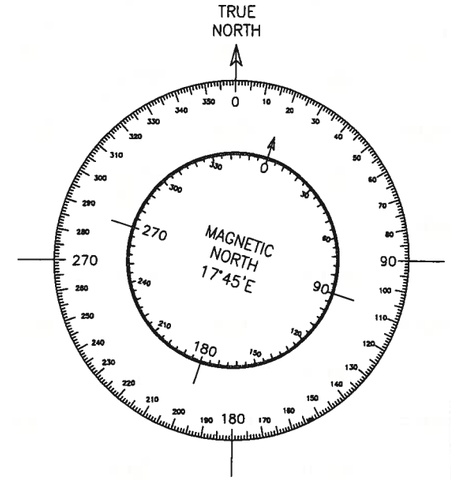

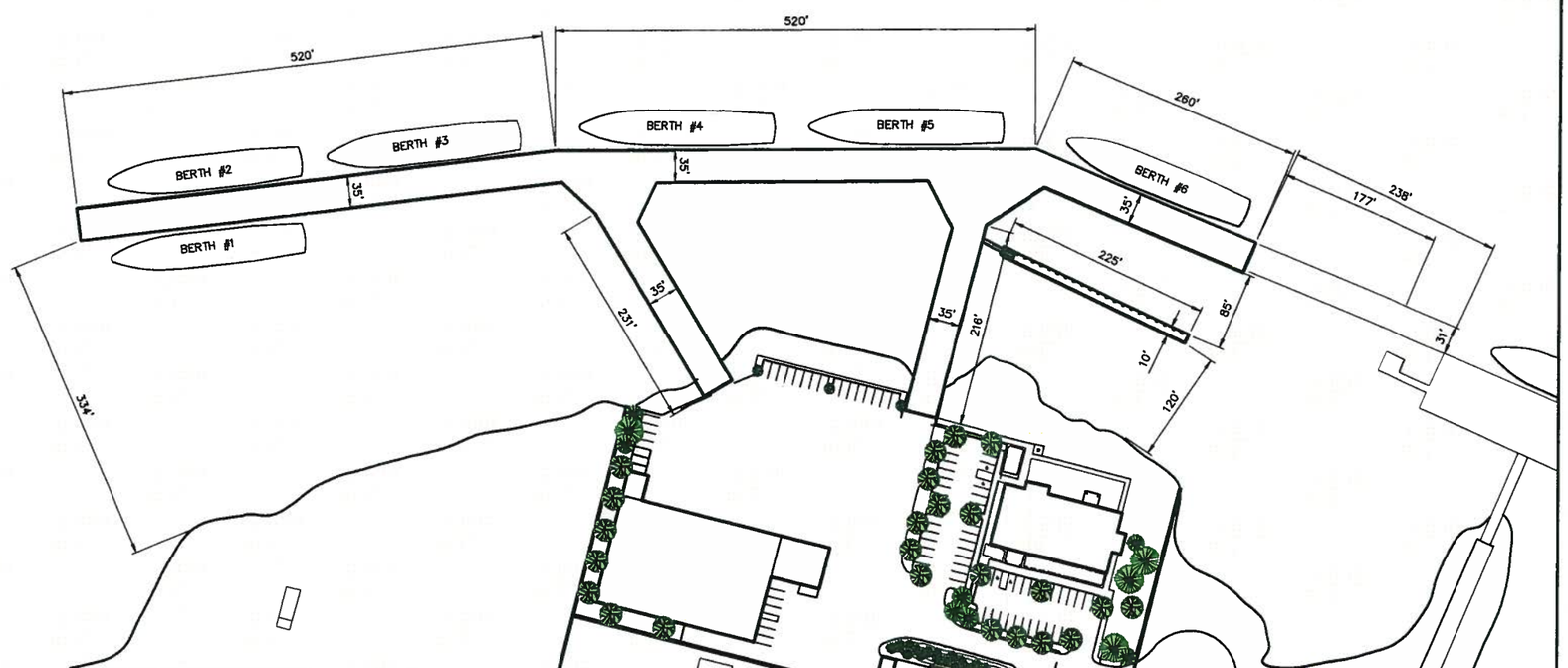

REVISION	DATE	DESCRIPTION	BY

SCALE
80 0 80 160
1 INCH = 80 FEET

kpff Consulting Engineers
111 S.W. Fifth Avenue, Suite 2400 Portland, OR 97204-3628
(503) 227-3251 Civil Fax (503) 274-4681
Denver Eugene Los Angeles Pasadena Phoenix Portland St. Louis
Sacramento San Diego San Francisco Seattle Tacoma

FOR INFORMATION ONLY

JOB No.:	308336.90
DESIGNED BY:	XXX
DRAWN BY:	XXX
CHECKED BY:	XXX
PLOT DATE:	5/29/09 5:09pm
PLOTTED BY:	jholcomb
DWG NAME:	Site-proposal2.dwg
TAB NAME:	C1.1

Client Address

NOAA MOC-P PROPOSAL
(SFO #09WSA0200C)

DIMENSIONAL LAYOUT
BASE PLAN

SHEET NO.
C1.1
SHEET 1 OF XX
RECORD NO.
XXXXX-XX

22x34

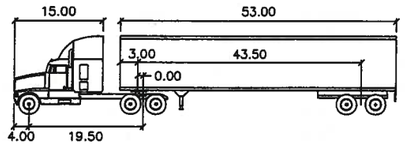

WB-65

	feet		
Tractor Width	: 8.00	Lock to Lock Time	: 6.00
Trailer Width	: 8.50	Steering Angle	: 28.4
Tractor Track	: 8.00	Articulating Angle	: 70.0
Trailer Track	: 8.50		

PIER STATISTICS: BASE OPTION	
TOTAL DRIVING LENGTH	1,930 FT
DRIVING WIDTH	33 FT
TOTAL USEABLE AREA	63,674 SF

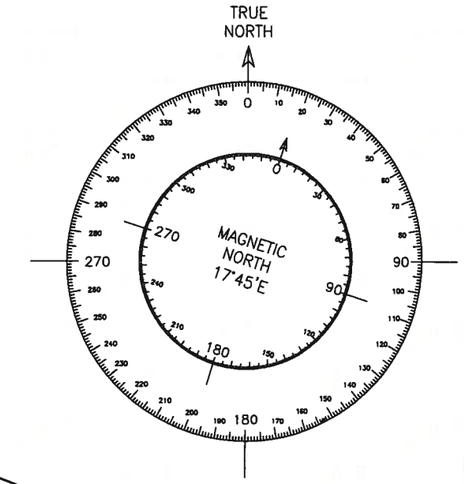

REVISION	DATE	DESCRIPTION	BY

22x34

SCALE
50 0 50 100
1 INCH = 50 FEET

kpff Consulting Engineers
111 S.W. Fifth Avenue, Suite 2400 Portland, OR 97204-3628
(503) 227-3251 Civil Fax (503) 274-4681
Denver Eugene Los Angeles Pasadena Phoenix Portland St. Louis
Sacramento San Diego San Francisco Seattle Tacoma

FOR INFORMATION ONLY

JOB No.:	308338.90
DESIGNED BY:	XXX
DRAWN BY:	XXX
CHECKED BY:	XXX
PLOT DATE:	5/29/09 5:10pm
PLOTTED BY:	jholcomb
DWG NAME:	Site-proposal2.dwg
TAB NAME:	C1.2

Client Address

NOAA MOC-P PROPOSAL
(SFO #09WSA0200C)

TRUCK ROUTE
BASE PLAN

SHEET NO.
C1.2
SHEET 1 OF XX
RECORD NO.
XXXXX-XX

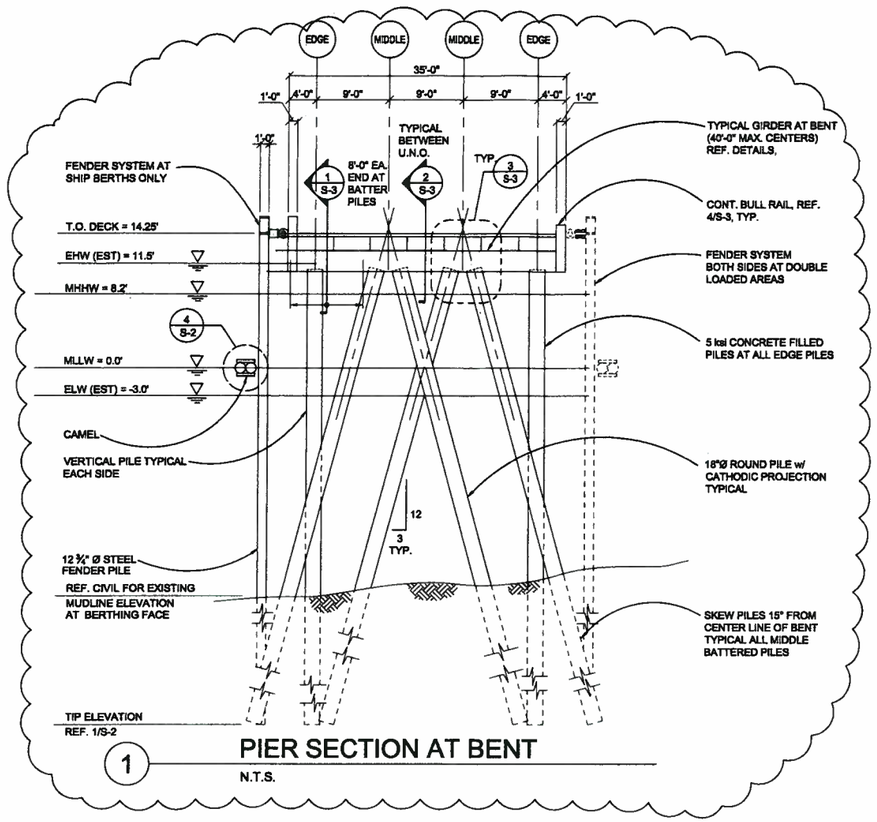

1 PIER SECTION AT BENT

N.T.S.

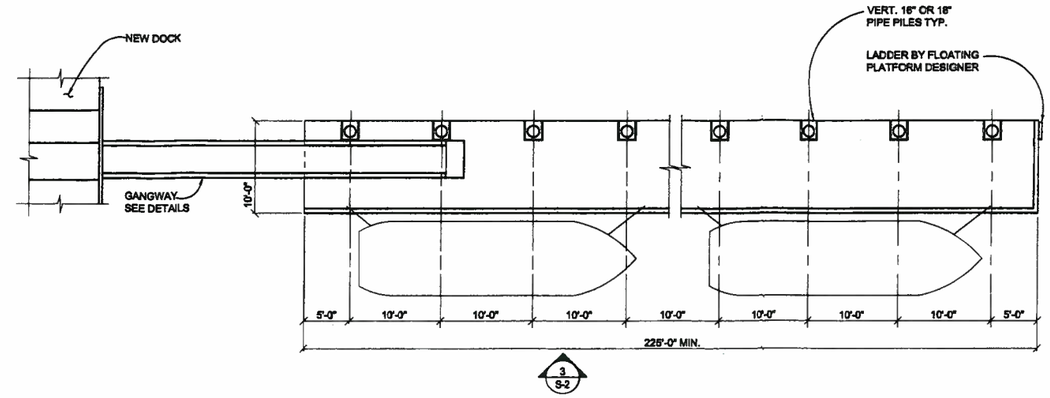

NOTES:

1. SMALL BOAT MOORAGE AND ASSOCIATED DETAILS SHOWN ON THIS SHEET TO BE BIDDER DESIGNED WITH LOADING PROVIDED BY NOAA AND MARINE ENGINEER.

2 SMALL BOAT MOORAGE PLATFORM AND PILING PLAN

1/8"=1'-0"

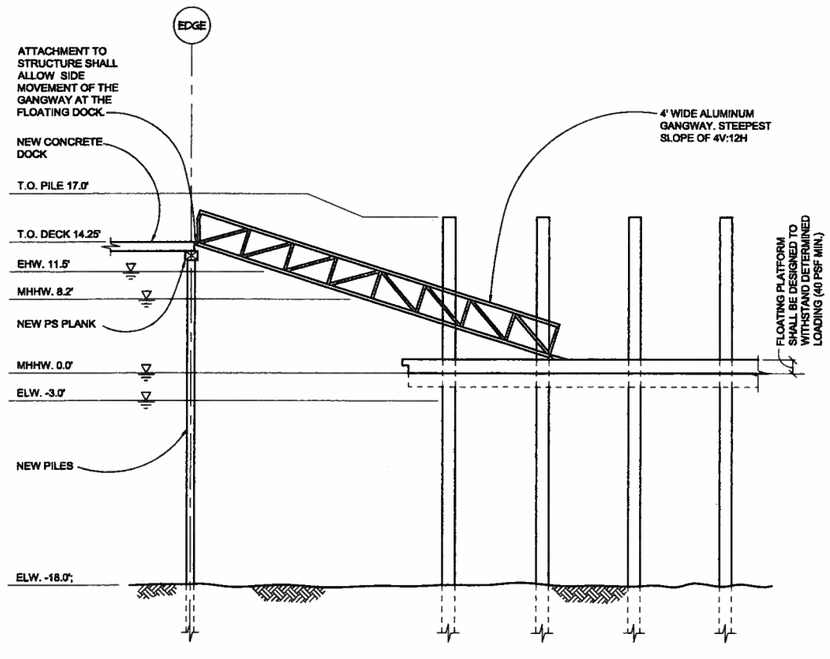

3 PIER SECTION AT BENT (40'-0" o.c.)

1/8"=1'-0"

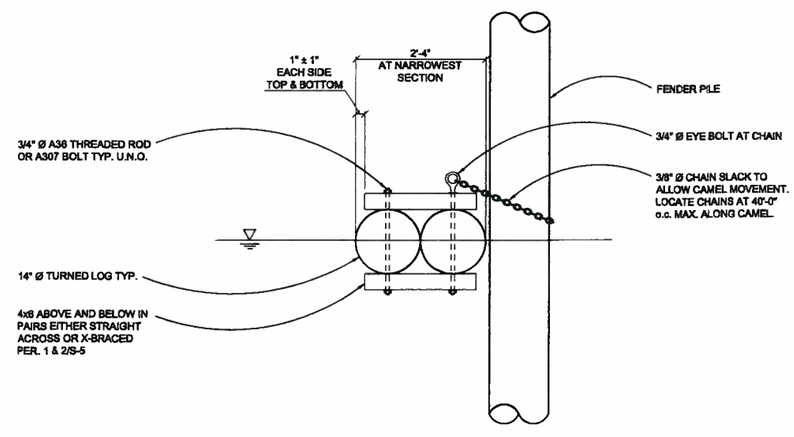

4 CAMEL SECTION

1/8"=1'-0"

NOT FOR CONSTRUCTION
CONCEPT PLAN 1-28-2009

NO.	DATE	REVISIONS

NOAA
NEWPORT, OREGON

DOCK PLAN AND DETAILS

NAME
DATE 1-28-2009
SCALE
CHECKED
SHEET S-2
OF SHEETS
JOB NO. 208644.9

File: G:\s\p\200... ...0\S02.DWG TAB:Layout1
Plotted: 5/22/09 ... 4:26pm By: jwilkes
XREFs: X-TB

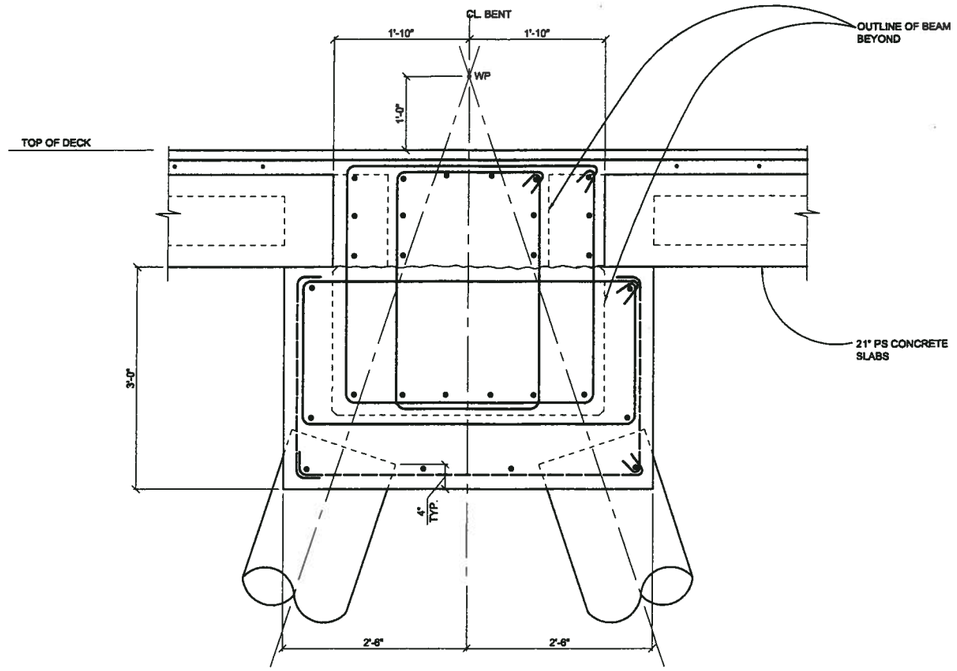

TYP. BENT ENDS AT BATTER PILES (15 LOCATIONS)

1 — 1"=1'-0"

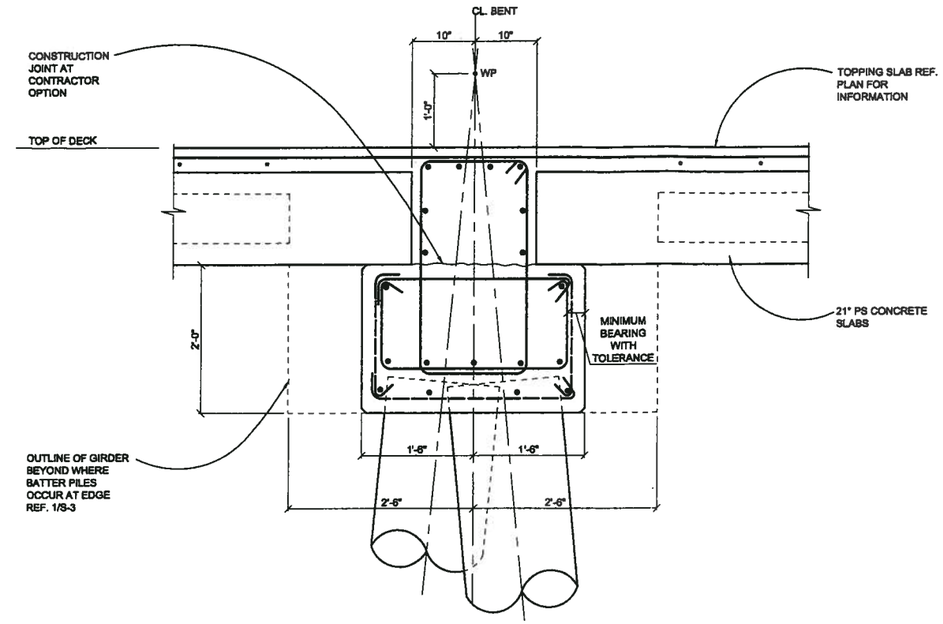

TYP. BENT SECTION

2 — 1"=1'-0"

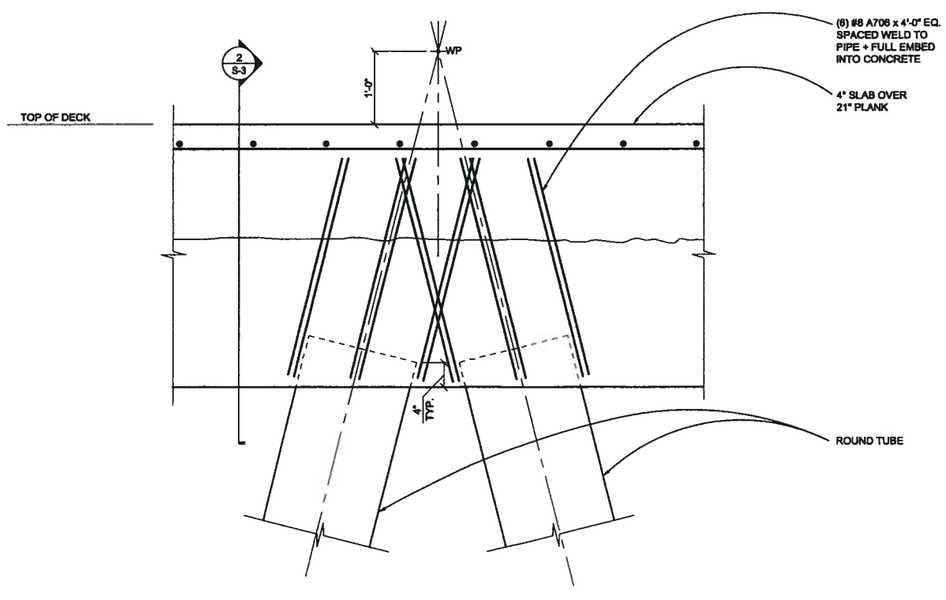

BATTER PILE AT BENT

3 — 1"=1'-0"

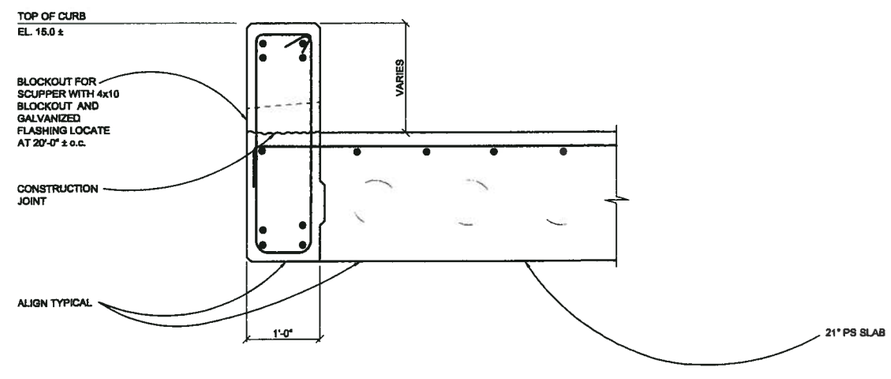

TYPICAL EDGE BEAMS

4 — 1"=1'-0"

NOT FOR CONSTRUCTION
CONCEPT PLAN 1-28-2009

NO.	DATE	REVISIONS

NOAA
NEWPORT, OREGON

DOCK DETAILS

NAME	
DATE	1-28-2009
SCALE	
CHECKED	
SHEET	S-3
OF	SHEETS
JOB NO.	208544.9

File: G:\a\p\200...\S03.DWG TAB:Layout1
Plotted: 1/28/09 ... 2:24pm By: jmikes
XREFS: X-TB

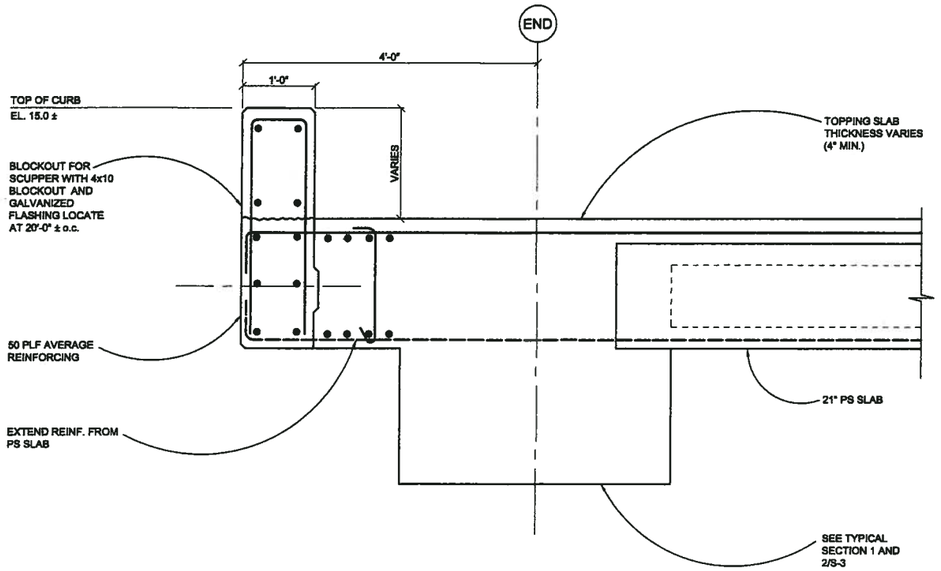

END OF DECK
CANTILEVER AND CURB

1

1"=1'-0"

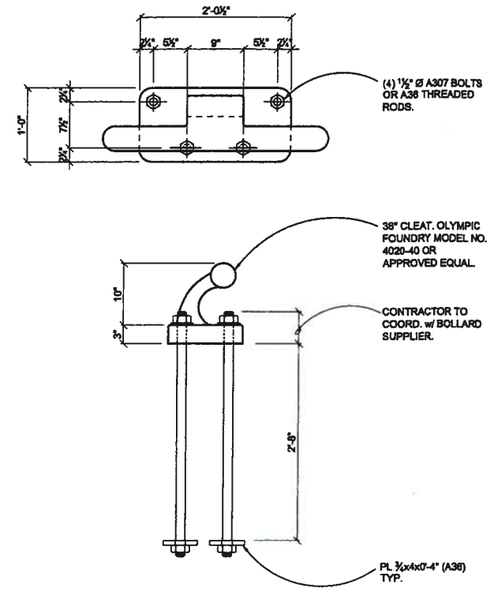

36" CLEAT

2

1"=1'-0"

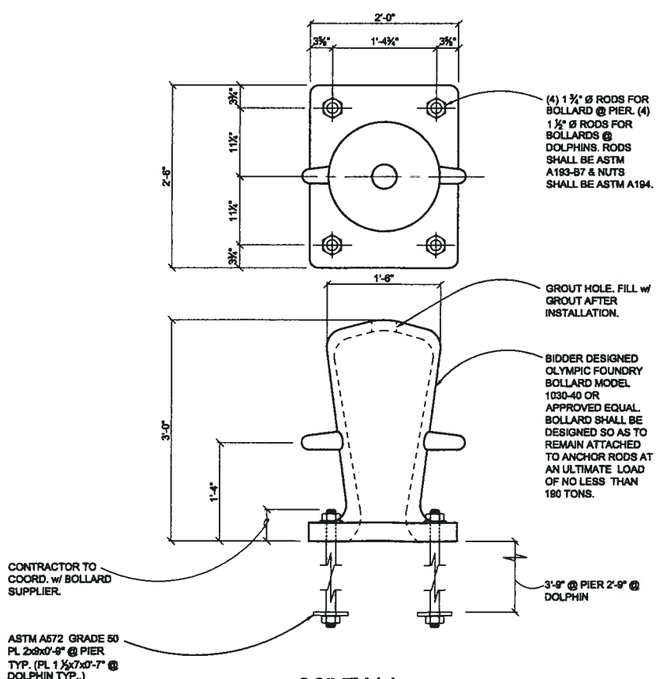

36" TALL
SINGLE POST BOLLARD

3

1"=1'-0"

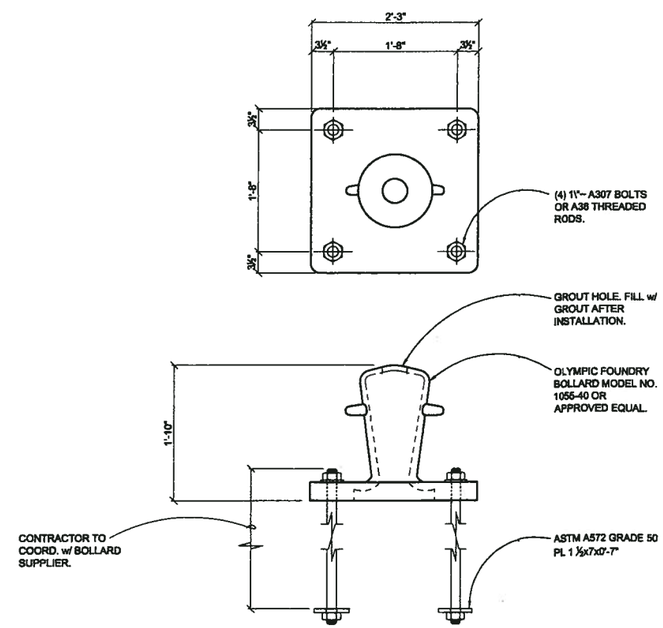

22" TALL SINGLE POST BOLLARD

4

1"=1'-0"

NOT FOR CONSTRUCTION
CONCEPT PLAN 1-28-2009

NO.	DATE	REVISIONS

NOAA
NEWPORT, OREGON

DOCK DETAILS

NAME
DATE 1-28-2009
SCALE
CHECKED
SHEET S-4
OF SHEETS
JOB NO. 208544.9

File: G:\s\p\20(...\S04.DWG TAB:Layout1
Plotted: 1/28/09 ... 25pm By: jwilkes
XREFs: X-TB

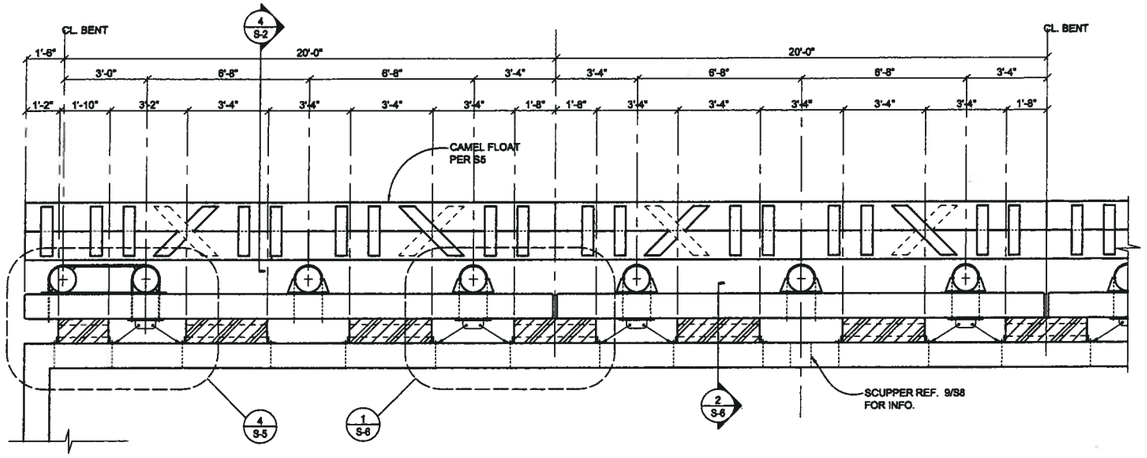

1 PIER FENDER SYSTEM - PLAN VIEW
1/4"=1'-0"

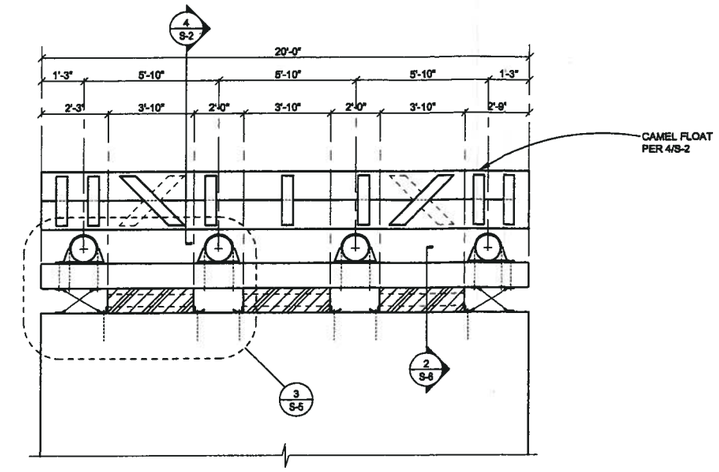

2 BREASTING DOLPHIN FENDER SYSTEM - PLAN VIEW
1/4"=1'-0"

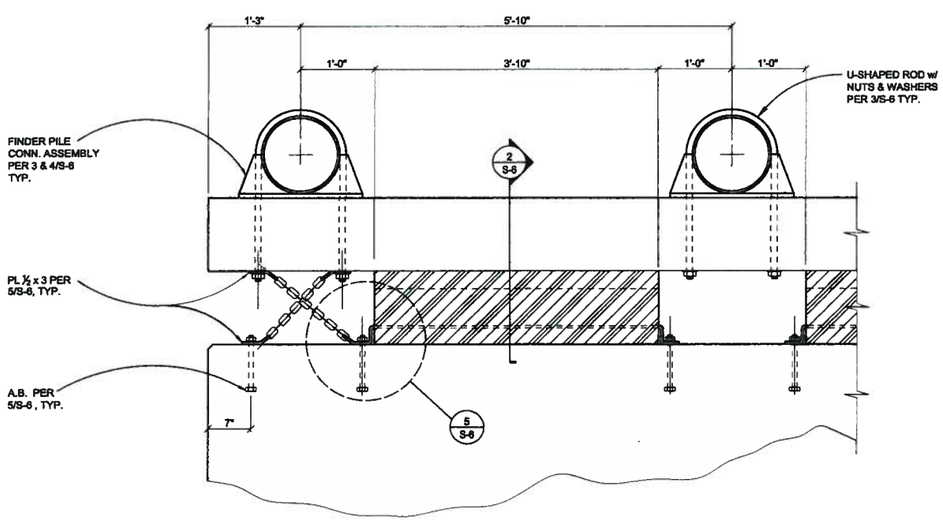

3 FENDER SYSTEM DETAIL
1"=1'-0"

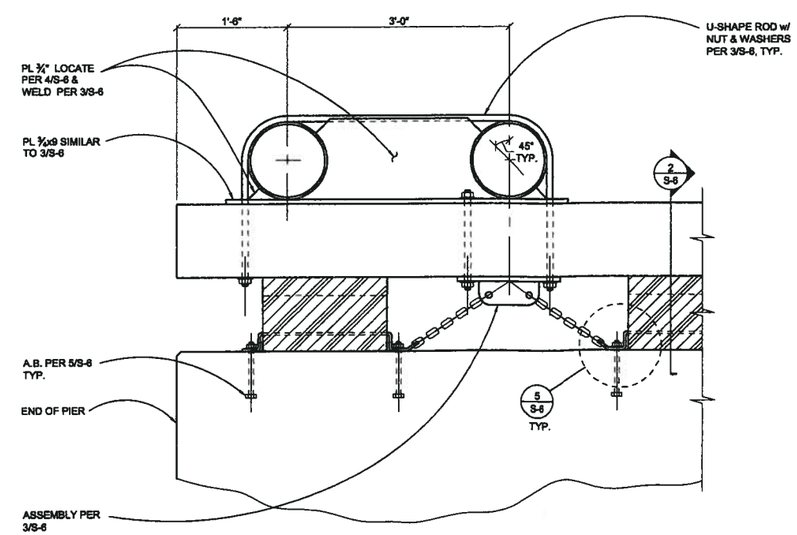

4 FENDER SYSTEM DETAIL
1"=1'-0"

NOT FOR CONSTRUCTION
CONCEPT PLAN 1-28-2009

NO.	DATE	REVISIONS

NOAA
NEWPORT, OREGON

FENDER DETAILS

NAME
DATE 1-28-2009
SCALE
CHECKED
SHEET S-5
OF SHEETS
JOB NO. 208644.9

File: G:\s\p\20... \S05.DWG TAB: Layout1
Plotted: 1/28/09 ... 4:26pm By: jwilkes
XREFs: X-TB

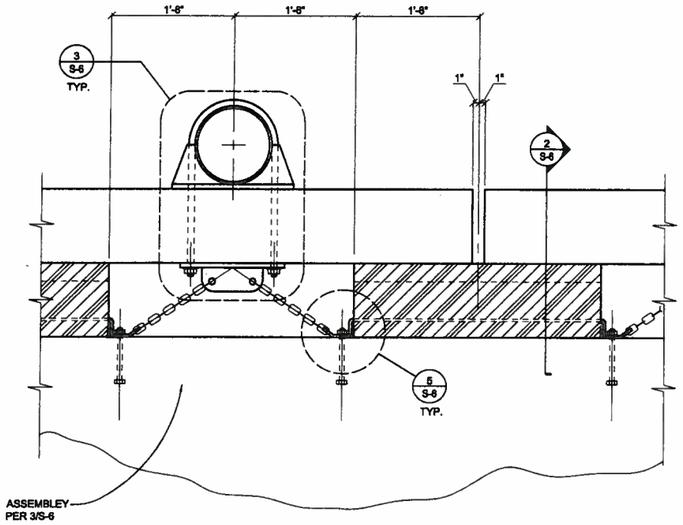

1 FENDER SYSTEM DETAIL
1"=1'-0"

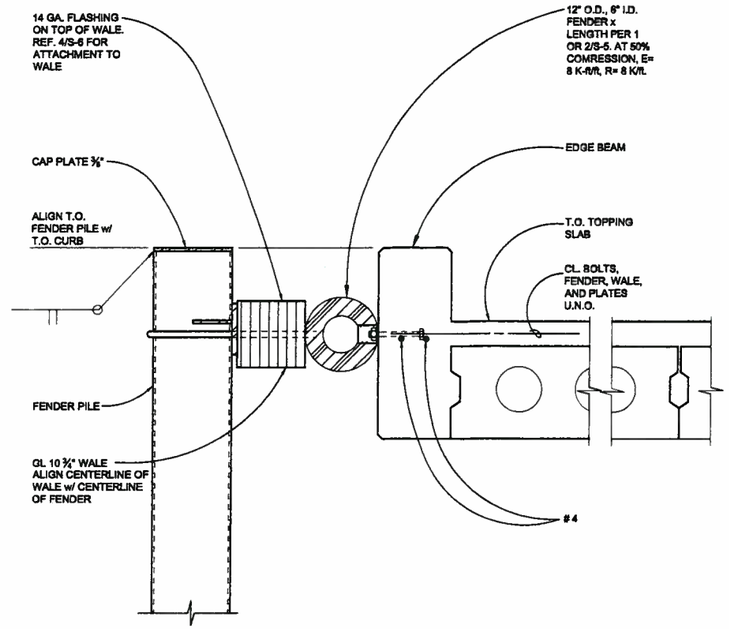

2 FENDER SYSTEM DETAIL
3/4"=1'-0"

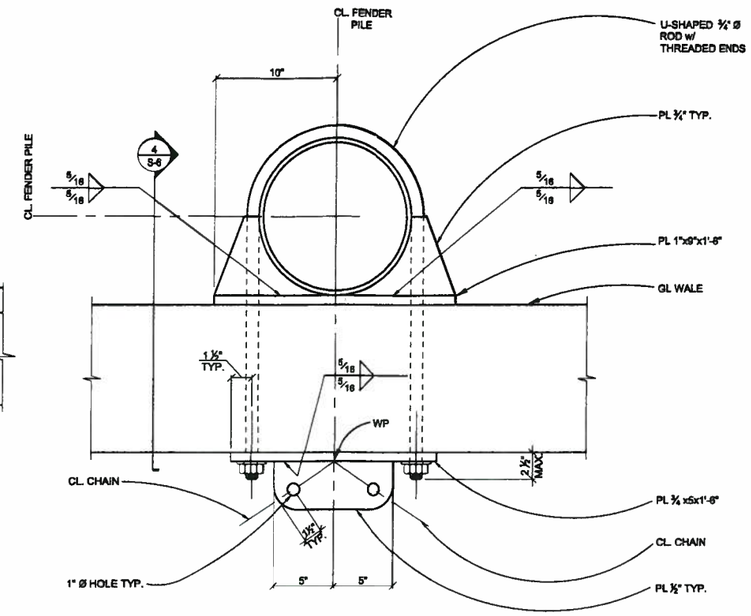

3 FENDER SYSTEM DETAIL
1 1/2"=1'-0"

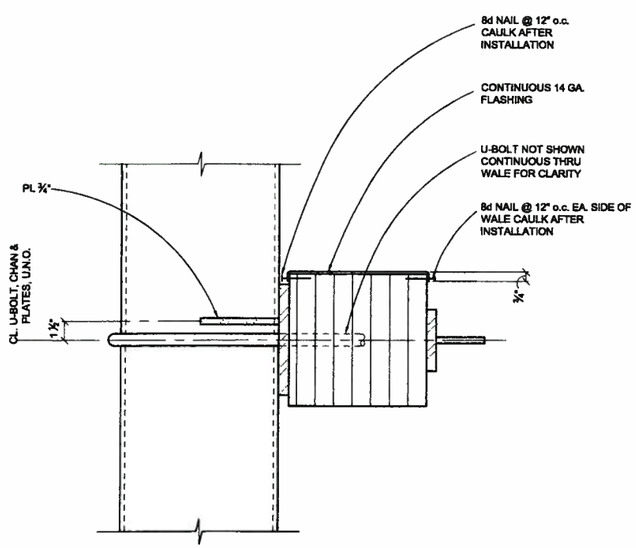

4 FENDER SYSTEM DETAIL
1 1/2"=1'-0"

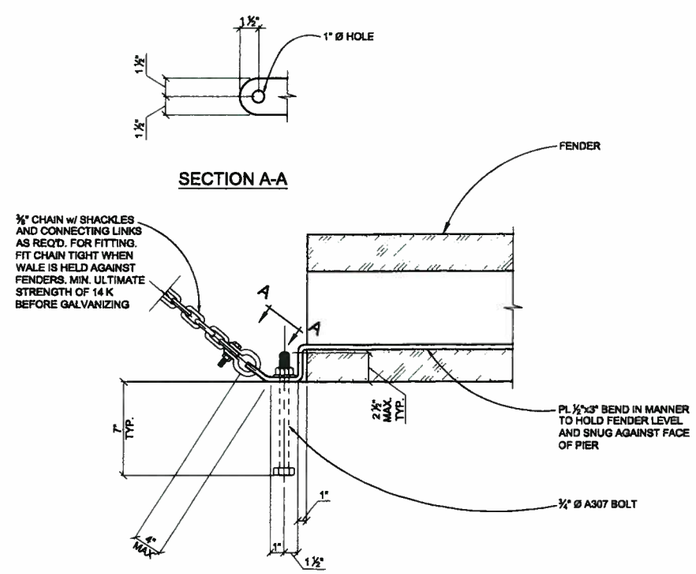

5 FENDER SYSTEM DETAIL
1 1/2"=1'-0"

NOT FOR CONSTRUCTION
CONCEPT PLAN 1-28-2009

NO.	DATE	REVISIONS

NOAA
NEWPORT, OREGON

FENDER DETAILS

NAME	
DATE	1-28-2009
SCALE	
CHECKED	
SHEET	S-6
OF	SHEETS
JOB NO.	208644.9

File: G:\s\p\20... J\S06.DWG TAB: Layout1
Plotted: 1/28/09 ... 4:27pm By: jwilkes
XREFs: X-TB