REVISIONS					
REV	ZONE	DESCRIPTION	BY	DATE	APPD

GENERAL NOTES

1. THE PURPOSE OF THIS DRAWING IS TO SHOW THE MODIFIED GENERAL ARRANGEMENT OF THE SHIP "EX-CAPABLE" AS CONVERTED TO A NOAA RESEARCH SHIP "OKEANOS EXPLORER".
2. ALL WORK (TO INCLUDE MATERIALS, WORKMANSHIP, AND ENGINEERING DESIGNS) SHALL BE IN ACCORDANCE WITH THE SPECIFICATIONS AND SHALL MEET APPLICABLE "AMERICA BUREAU OF SHIPPING" (ABS), CFR 46, AND SOLAS REQUIREMENTS.
3. ABBREVIATIONS ARE IN ACCORDANCE WITH ASME Y14.38-1999.
4. ALL FEATURES ARE EXISTING UNLESS NOTED: (N) NEW, (M) MODIFIED, (R) RELOCATED.
5. WHERE EQUIPMENT MANUFACTURER/MODEL IS IDENTIFIED SUBSTITUTIONS MUST BE APPROVED BY NOAA AS HAVING EQUAL SALIENT FEATURES AND QUALITY OF CONSTRUCTION. IN ADDITION, THE PROPOSED SUBSTITUTE MUST BE SHOWN TO BE SUITABLE FOR INTEGRATION INTO THE SYSTEM WITHOUT HAVING A NEGATIVE IMPACT ON THE OVERALL ARRANGEMENT, PERFORMANCE, MAINTENANCE OR ACCESS TO THE SPACE.
6. CLEAR HEAD ROOM IN NORMALLY OCCUPIED SPACES SHALL BE AS HIGH AS POSSIBLE, BUT NOT LESS THAN 6 FEET 9 INCHES.

NO	TITLE	DRAWING NO.

REFERENCES

NATIONAL OCEANIC AND ATMOSPHERIC ADMINISTRATION
OFFICE OF NOAA CORPS OPERATIONS

AMSEC LLC
M. ROSENBLATT & SON GROUP
NAVAL ARCHITECTS & MARINE ENGINEERS
BREMERTON, OAKLAND, SAN DIEGO

DESIGNED	NN & SMC	11/05
CHECKED	P. CHIAVETTA	11/05
REVIEWED		
APPROVED		

PROJECT ENGR	DATE
ASST PROG MGR	DATE
PROGRAM MGR	DATE
APPROVED FOR NOAA	
SCALE: AS NOTED	

NOAA SHIP OKEANOS EXPLORER GENERAL ARRANGEMENT PLANS & PROFILES- CONVERTED VESSEL

SIZE	CAGE CODE	NOAA DRAWING NUMBER	REV
F	OYLJ5	OE-601-001	-

CAD FILENAME: OE-601-001-05.DWG SHEET 1 OF 8

SNUM OE-601-001
SQ FT
AREA

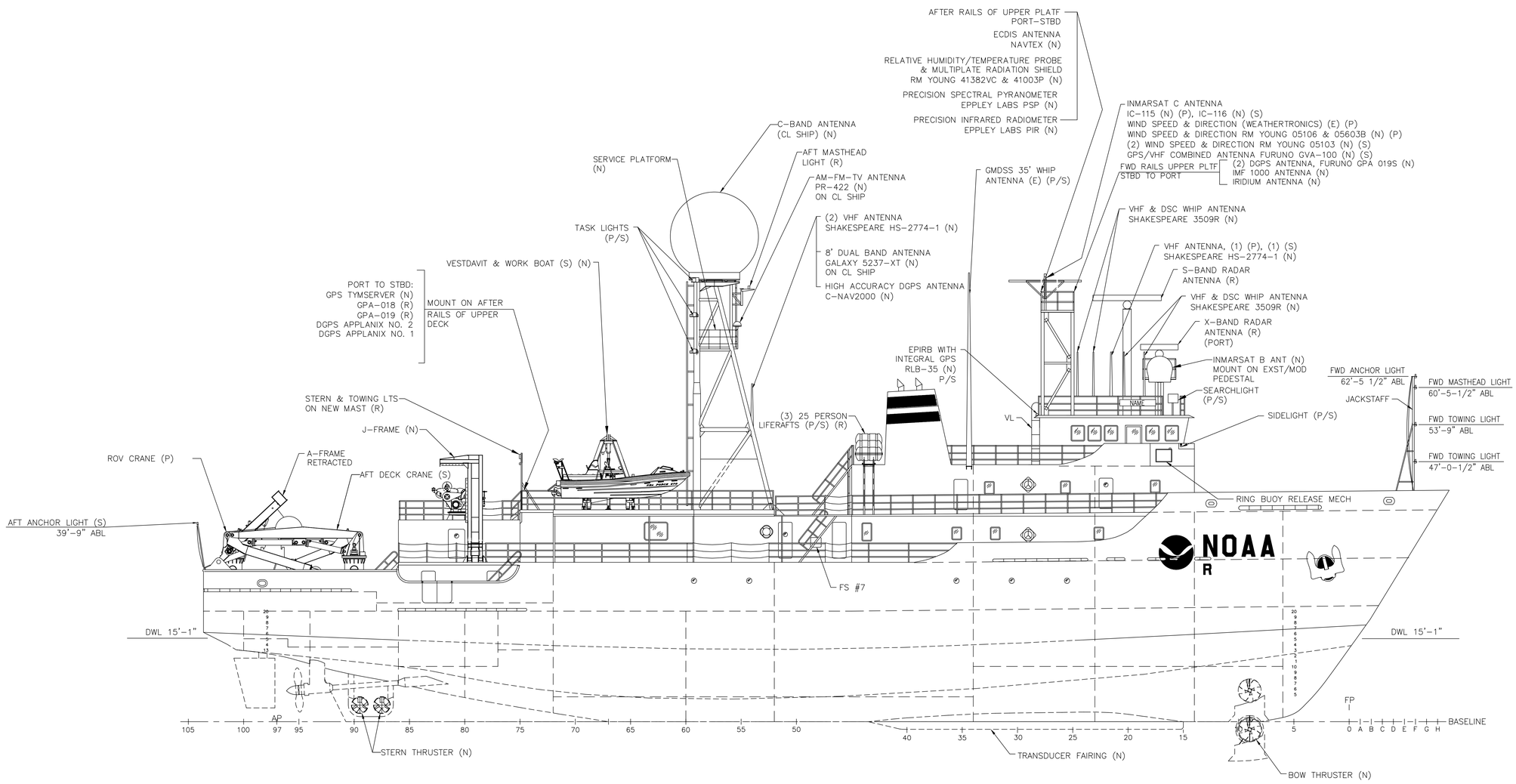

ELEVATION 12–B

OUTBOARD PROFILE

0 4 8 12 16 20 24 28 32 36
FEET

SIZE	CAGE CODE	NOAA DRAWING NUMBER	REV
F	0YLJ5	OE–601–001	–

SCALE: 1/8=1'–0 SHEET 2 OF 8

ACAD FILE NAME: OE–601–001–05

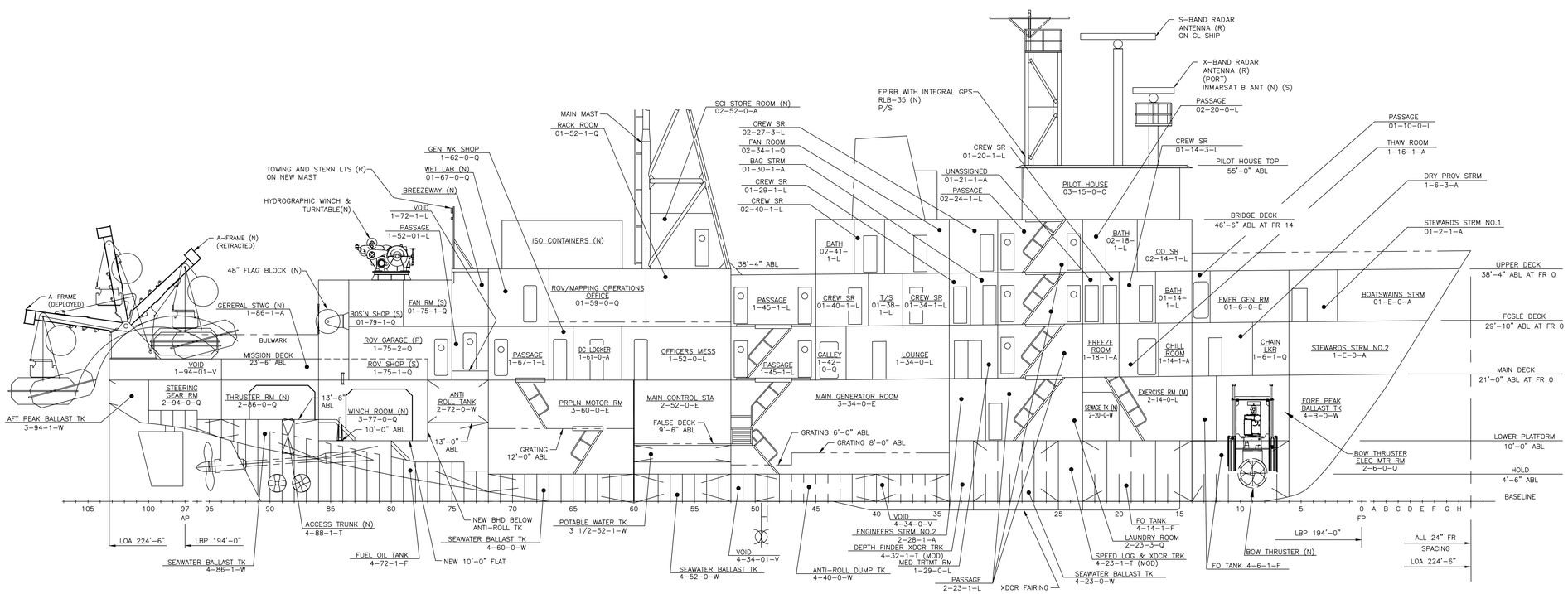

NOTE:
UPPER, FCSLE AND MAIN DK DIMENSIONS ABL INCLUDE 12" OF SHEER THAT COMMENCES 3" AFT OF FR 44.

ELEVATION 20-B
INBOARD PROFILE

0 4 8 12 16 20 24 28 32 36
FEET

SIZE	CAGE CODE	NOAA DRAWING NUMBER	REV
F	OYLJ5	OE-601-001	-
SCALE: 1/8=1'-0		SHEET 3 OF 8	

ACAD FILE NAME: OE-601-001-05

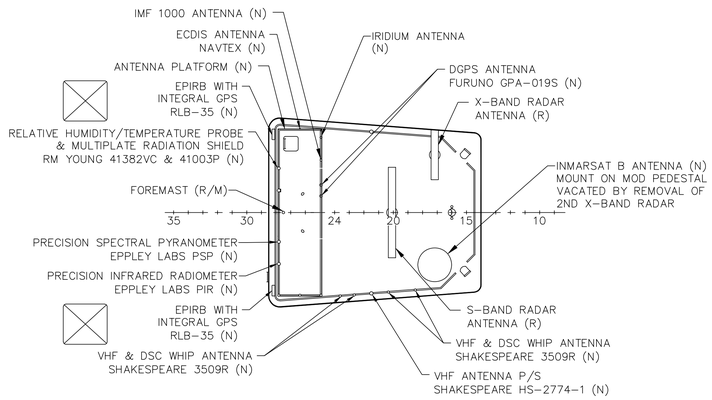

PLAN 31-D
PILOT HOUSE TOP

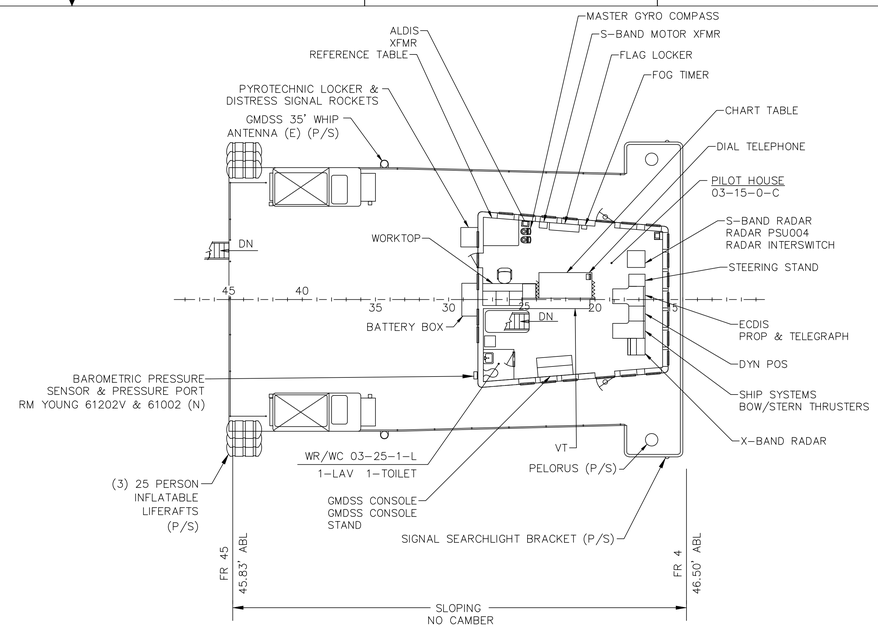

PLAN 27-D
BRIDGE DECK

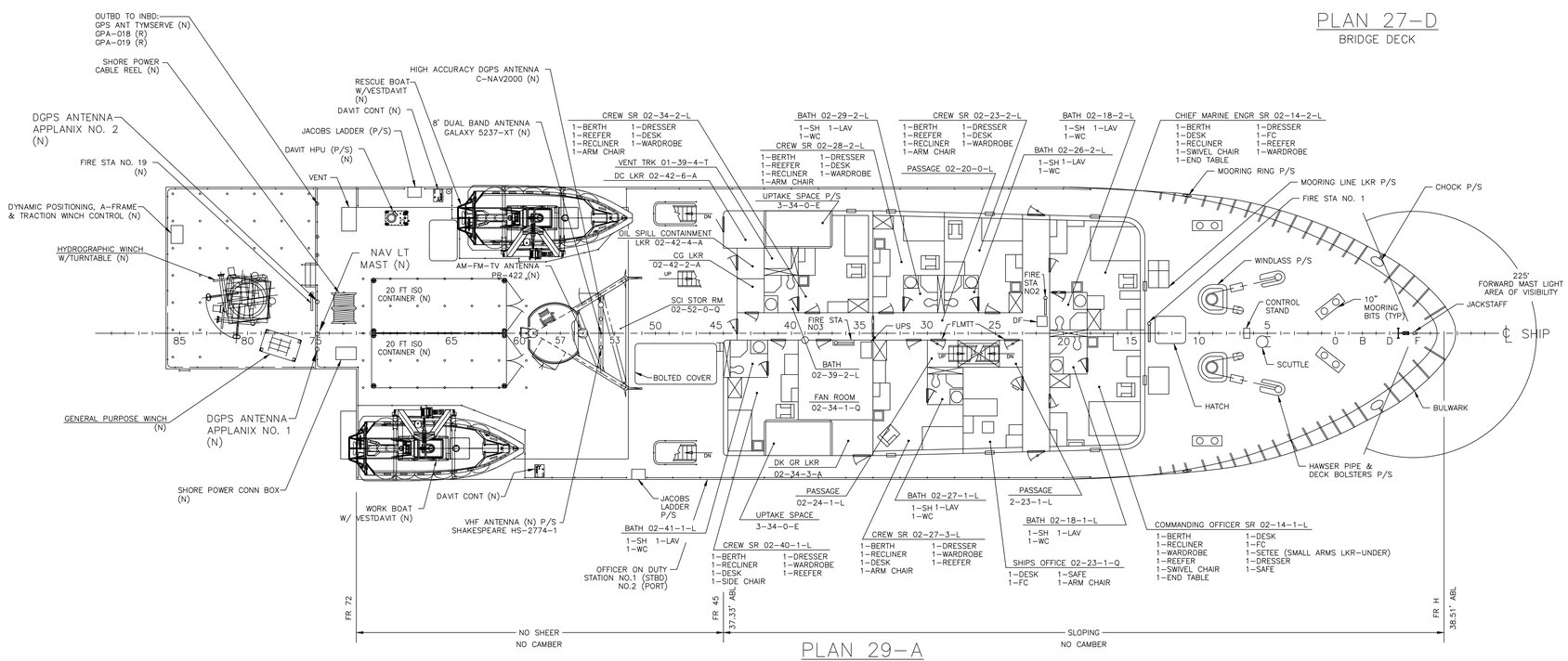

PLAN 29-A
UPPER DECK

0 4 8 12 16 20 24 28 32 36
FEET

SIZE	CAGE CODE	NOAA DRAWING NUMBER	REV
F	0YLJ5	OE-601-001	-
SCALE: 1/8=1'-0		SHEET 4 OF 8	

ACAD FILE NAME: OE-601-001-05
25

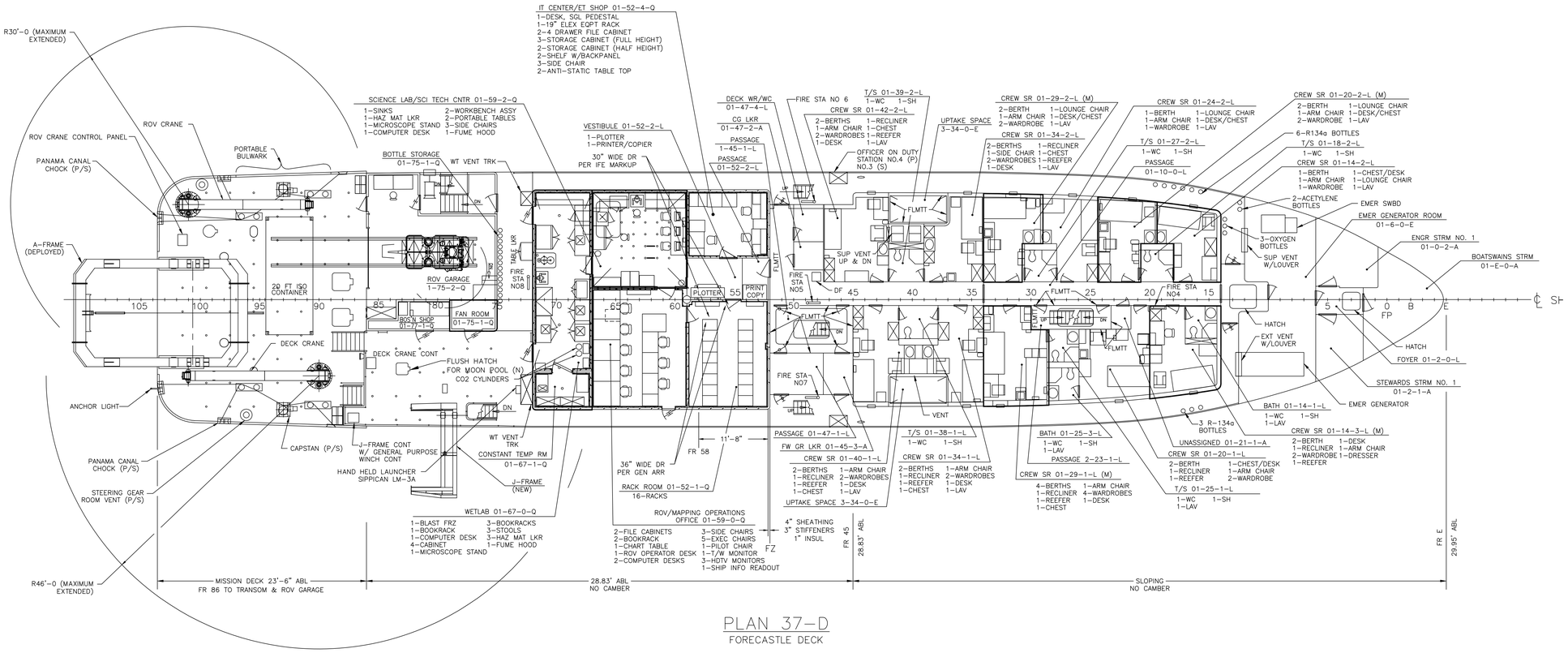

PLAN 37-D

FORECASTLE DECK

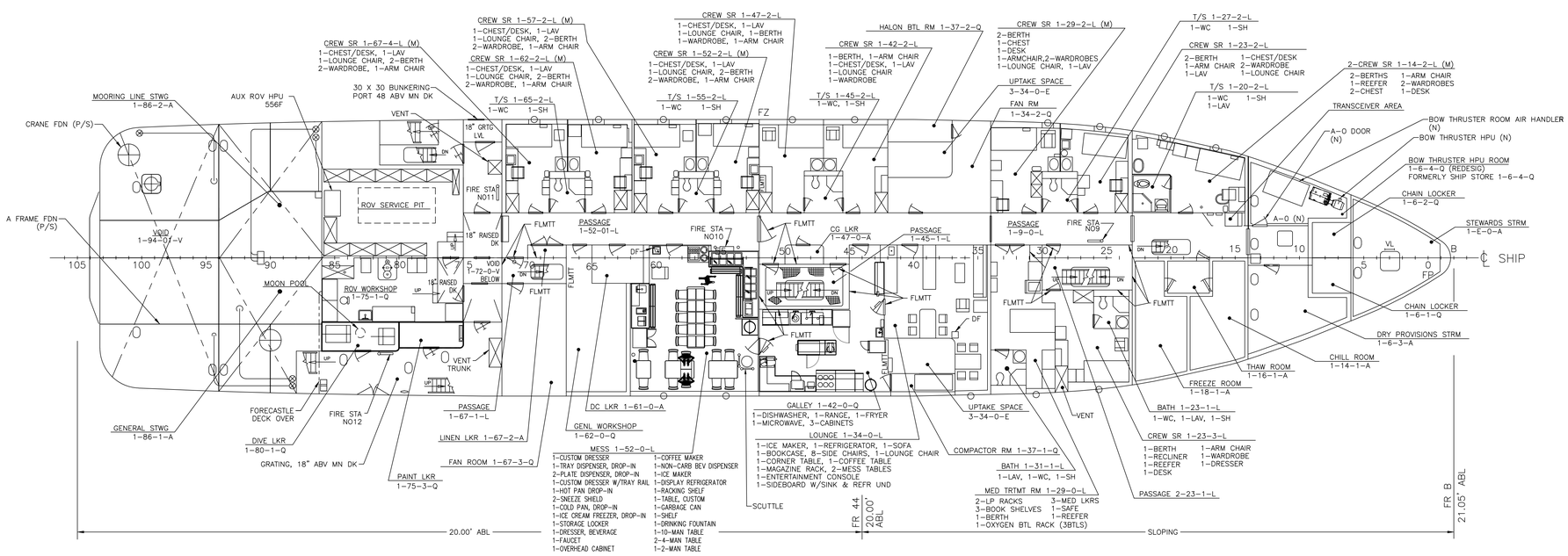

PLAN 37-A

MAIN DECK

0 4 8 12 16 20 24 28 32 36
FEET

SIZE	CAGE CODE	NOAA DRAWING NUMBER	REV
F	0YLJ5	OE-601-001	–

SCALE: 1/8=1'-0 SHEET 5 OF 8

ACAD FILE NAME: OE-601-001-05

33

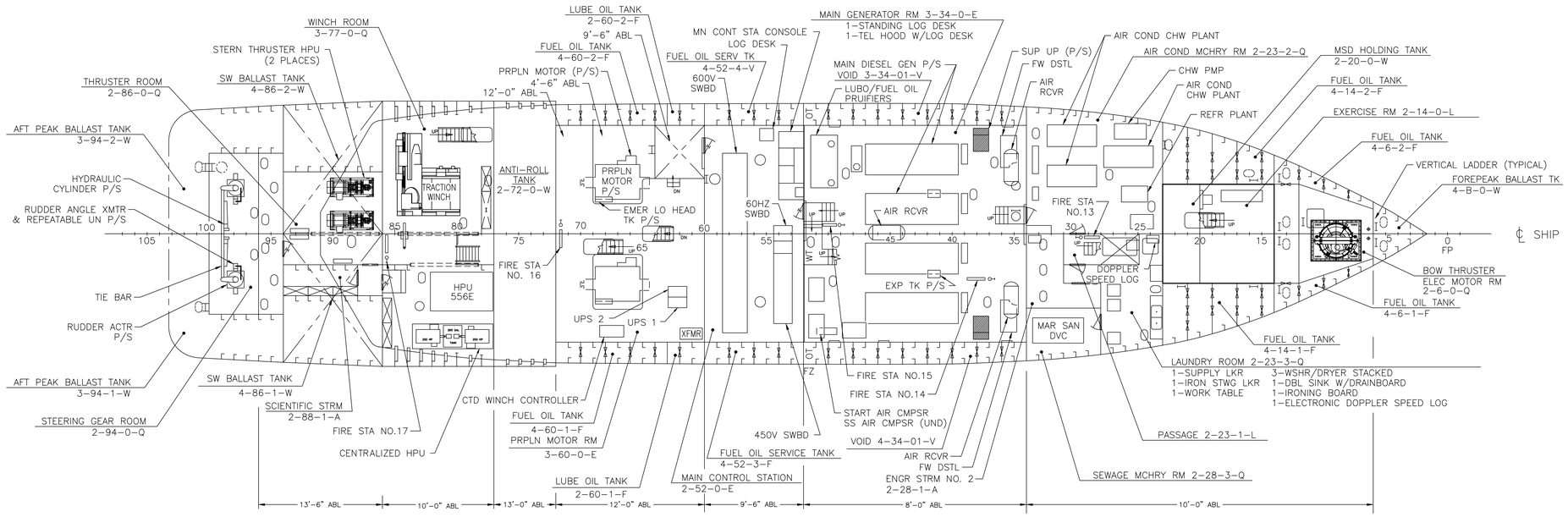

PLAN 45-D
LOWER DECK

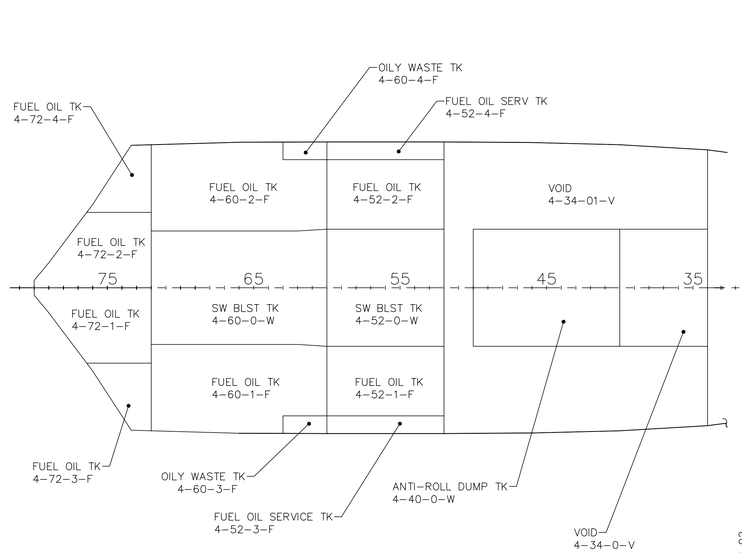

PLAN 47-A
INNERBOTTOM

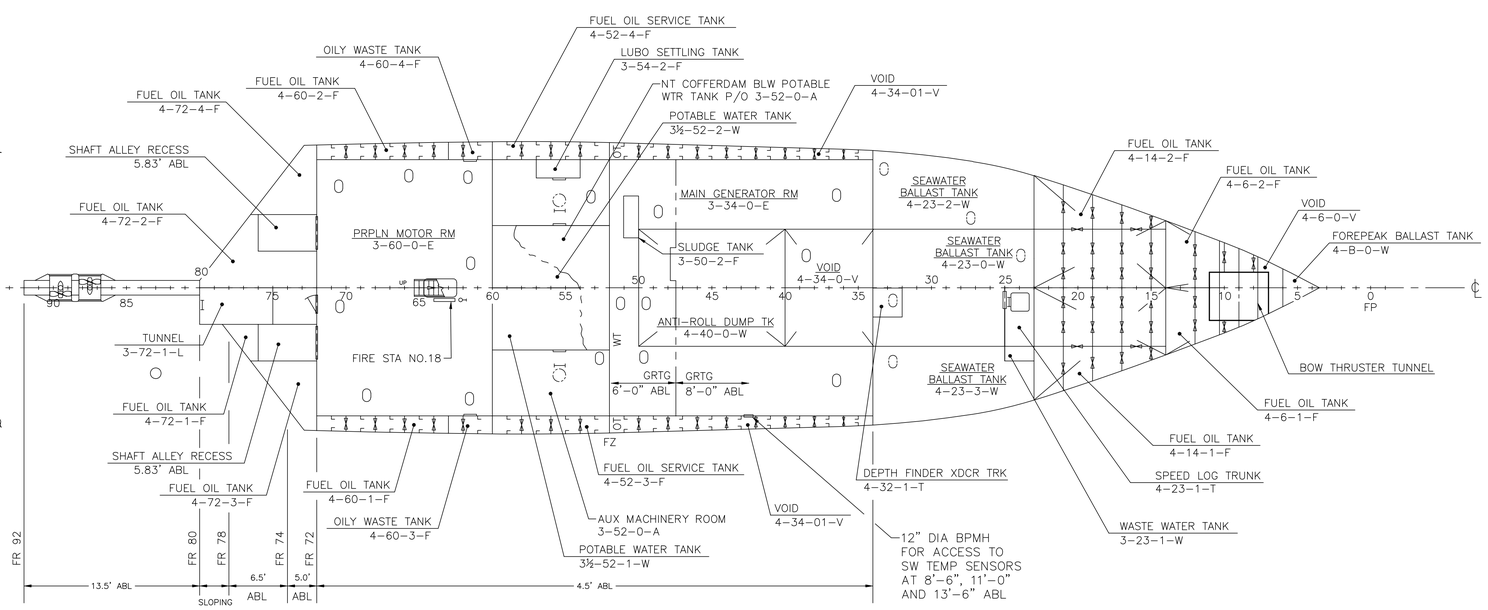

PLAN 44-A
HOLD

0 4 8 12 16 20 24 28 32 36
FEET

SIZE	CAGE CODE	NOAA DRAWING NUMBER	REV
F	0YLJ5	OE-601-001	–

SCALE: 1/8=1'-0 SHEET 6 OF 8

ACAD FILE NAME: OE-601-001-05

41

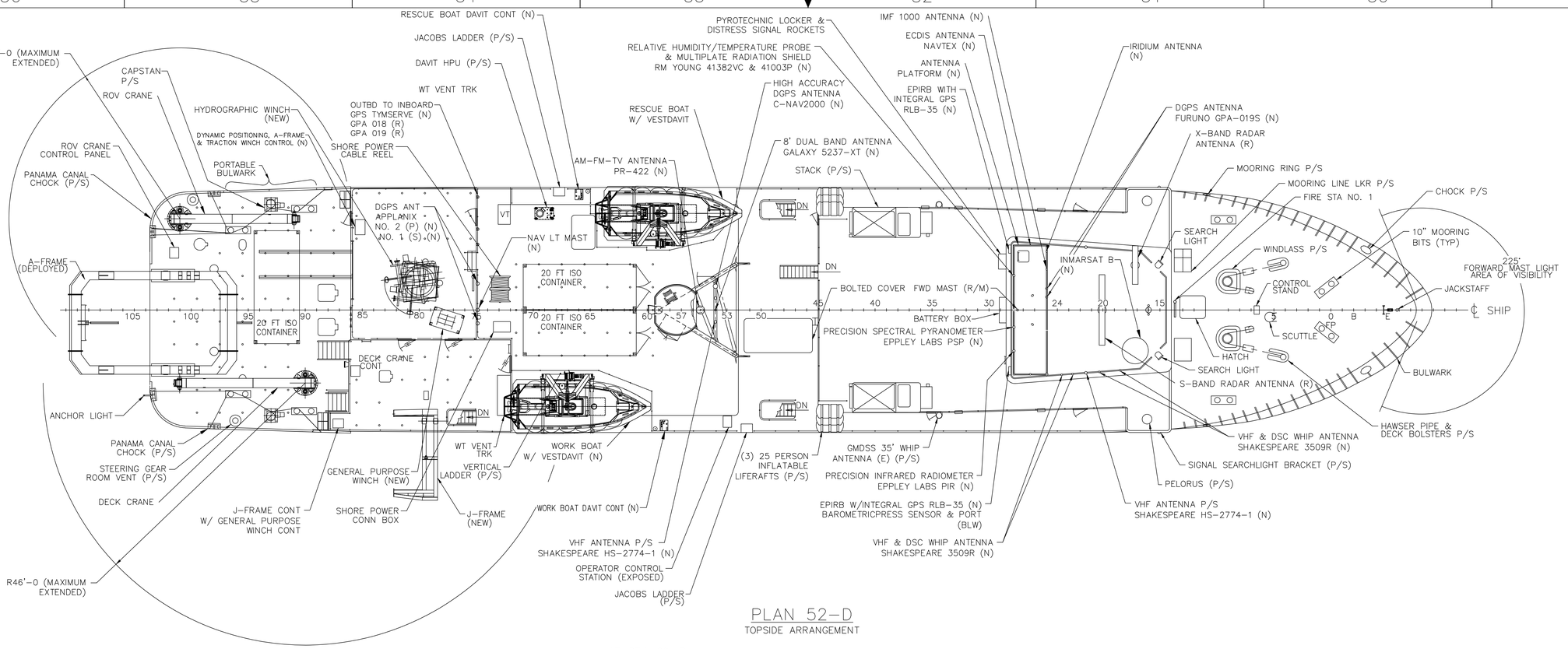

PLAN 52-D
TOPSIDE ARRANGEMENT

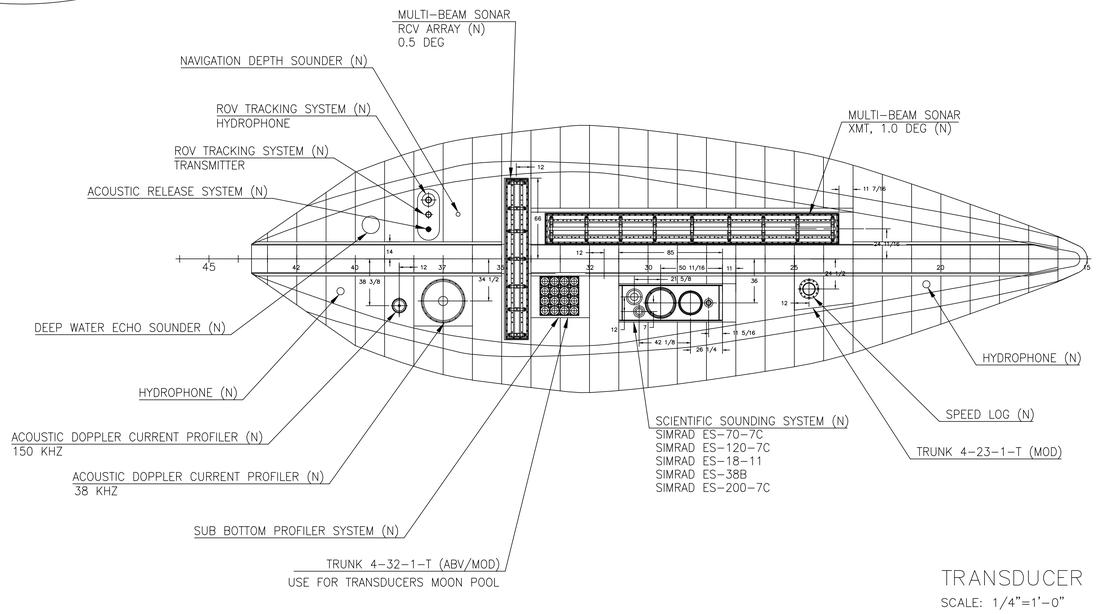

TRANSDUCER FAIRING AS SHOWN BELOW KEEL
SCALE: 1/4"=1'-0"

PLAN 52-A
FAIRING ARRANGEMENT

0 4 8 12 16 20 24 28 32 36
FEET

SIZE	CAGE CODE	NOAA DRAWING NUMBER	REV
F	0YLJ5	OE-601-001	05

SCALE: 1/8=1'-0 & AS NOTED — SHEET 7 OF 8

ACAD FILE NAME: OE-601-001-05

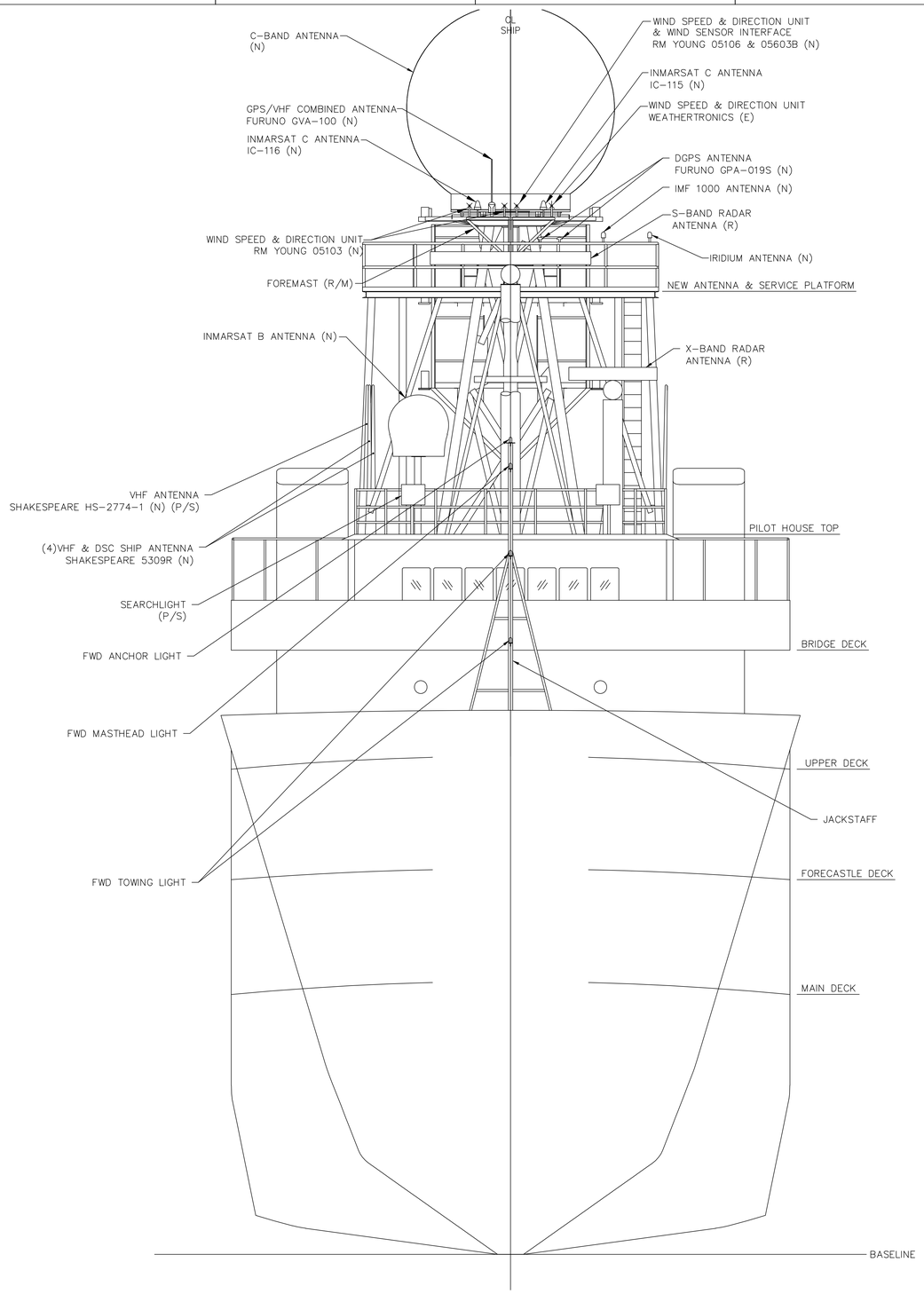

SECTION 62-A
BOW PROFILE

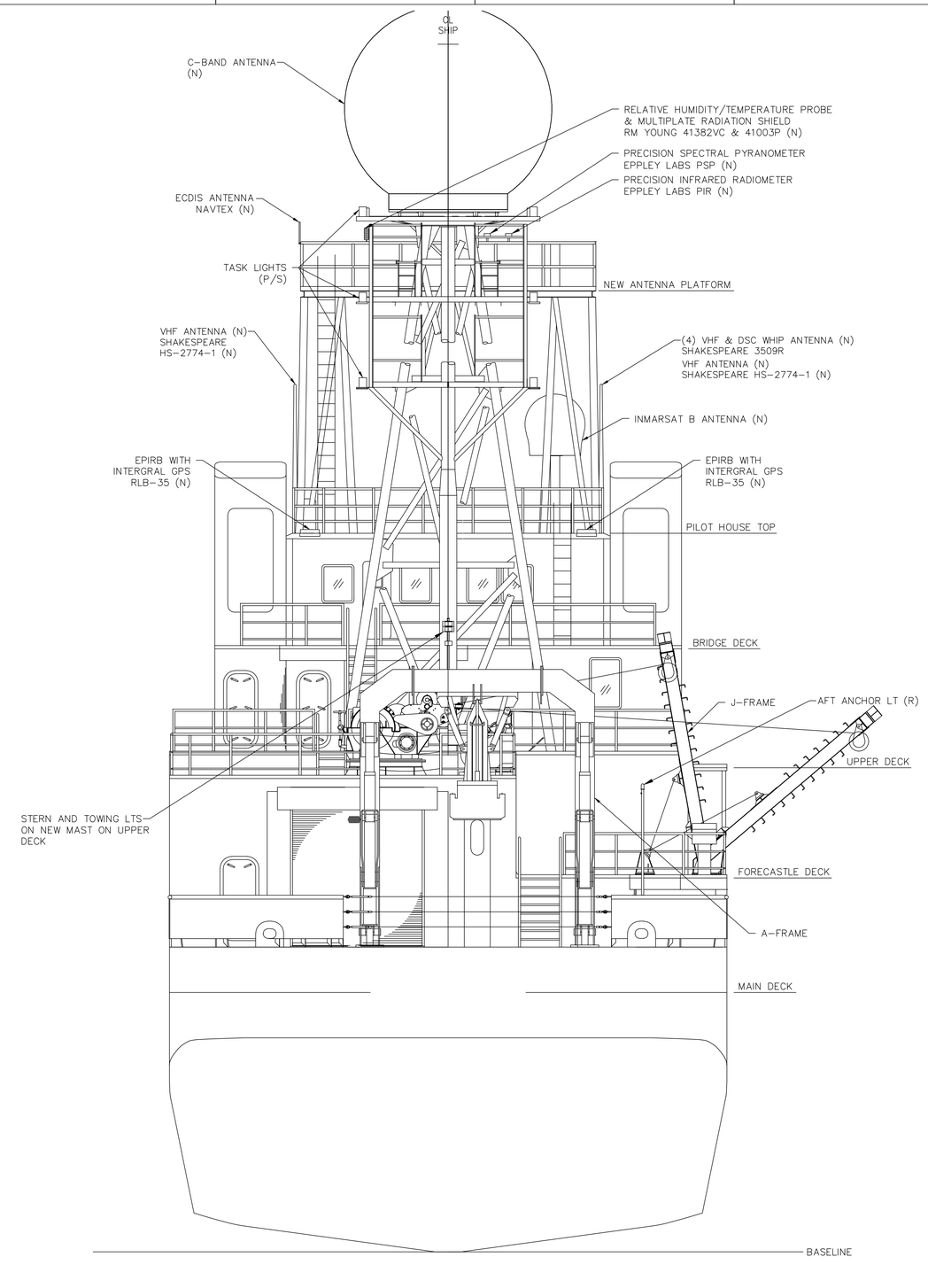

SECTION 58-A
STERN PROFILE

0 2 4 6 8 10 12 14 16 18
FEET

SIZE	CAGE CODE	NOAA DRAWING NUMBER	REV
F	0YLJ5	OE-601-001	-
SCALE: 1/4=1'-0		SHEET 8 OF 8	

ACAD FILE NAME: OE-601-001-05